ATM-MUX : an ATM multiplexer

Product description

The ATM-MUX is a DVB-RCS tailored multiplexing equipment. It is used for multiplexing different ATM input streams, each on a different OC-3 carrier coming from a burst demodulator, into one single ATM over OC-3 output.

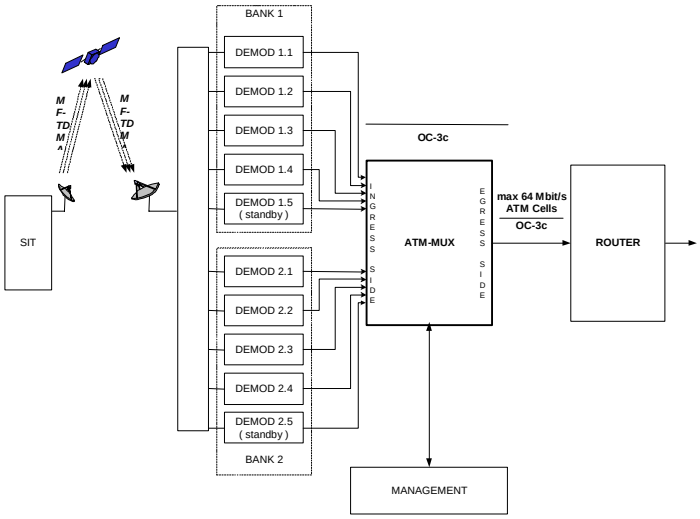

Key features

- **Monitoring and control Provisioning and configuration**
  - Offers Ethernet interface for global supervision of the ATM-MUX and features a complete display of all useful parameters.
  - Offers reporting of transmission faults and errors via Ethernet.
  - IP address configurable via local interfaces.
  - SW and FPGA image can be locally or remotely updated.
  - Control via RMCP over Ethernet.
- **SONET Receiver**
  - Optical to electrical conversion.
  - Frames and descrambles the received S T S-3c/STM1 stream.
  - Termination of OC-3 overhead with error and fault reporting according the standards (ITU- T I.432).
- **Receive ATM Processor**
  - Extracts ATM cells from the received S T S-3c/STM1 payload using ATM cell delineation.
  - Provides ATM cell payload de-scrambling.
  - Termination of ATM cell overhead with error and fault reporting according to the standards (ITU- T I.432).
  - Presents the ATM cell on an Utopia Level 2 interface.
- **ATM Multiplexing**
  - Reads the ATM cells from the Utopia Level 2 interface.
  - Performs the multiplexing
  - Presents the ATM cells on an Utopia Level 2 interface
- **Transmit ATM Processor**
  - Reads the ATM cells from an Utopia Level 2 interface.
  - Provides idle/unassigned cell insertion.
  - Generation of ATM cell overhead according to the standards (ITU- T I.432).
  - Provides ATM cell payload scrambling.
- **SONET Transmitter**
  - Inserts ATM cells into the transmitted STS-3c/STM-1 payload.
  - Generates OC-3 overhead according to the standards (ITU-T I.432).
  - Electrical to Optical conversion.

- **Cascading**
  - It is possible to cascade two ATM-MUX's to obtain higher transfer rates. The limitation is the OC-3 transfer rate of 155 Mbps, therefore a cascaded ATM-MUX can have maximum 2 inputs with maximum 64 Mbit/s ATM cells. The burst may be up to 32 cells.

Technical characteristics

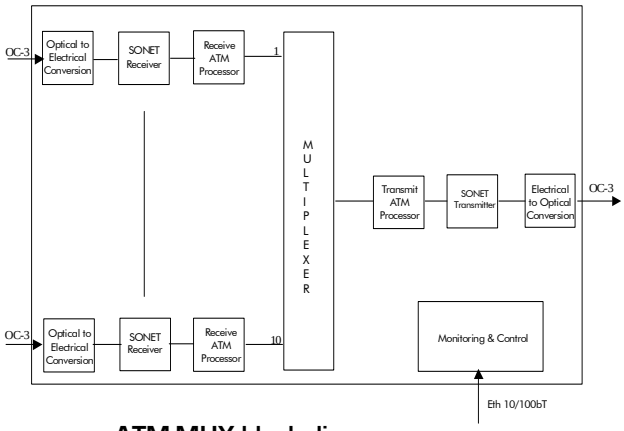

ATM-MUX block diagram

Hardware characteristics

PC 104 platform with proprietary hardware.

Input and Output characteristics

- Input: maximum 10 inputs with each maximum 4ATM cells at maximum 8 Mbps per OC-3 (without cascading); maximum 9, the total aggregated input may not exceed the max. output of 155 Mbps (OC-3)
- Output: output with maximum 32 ATM cells at maximum 64 Mbps in an OC-3
- The output is duplicated for possible redundancy schemes.
- Optical in- and outputs are compliant to ITU-T G.957
- Ethernet interface is compliant to IEEE802.3 and supports 10/100 baseT
- An output is provided for an equipment redundancy controller

Performance Characteristics:

- Max ATM cell throughput is limited by the signal rate of the OC-3 signal: 155Mbps
- Delay of 1 ATM cell is max 0.6 Msec

Environmental characteristics:

- 0°C to 60°C Operating Temperature Range
- 0% to 80% relative humidity, non-condensing

The Thales Alenia Space Antwerp N.V. policy is one of continuous development and consequently the equipment may vary in detail from the description and specification in this publication.

For further information, please contact

Thales Alenia Space Antwerp N.V.
Berkenrodelei 33
B-2660 Hoboken – Belgium
Tel. : +32 (0) 3 829 50 50
Fax : +32 (0) 3 829 50 02
E-mail : aasa.info@thalesaleniaspace.com
www.thalesaleniaspace.com